CHESTERFIELD SPECIAL CYLINDERS Ltd.

INTERNAL THREAD – 3.1/4" x 8UN–2B BOTH ENDS.

STAMP STEEL CODE ON THIS END.

NOTE:– ONLY 1 EXTERNAL THREAD REQUIRED

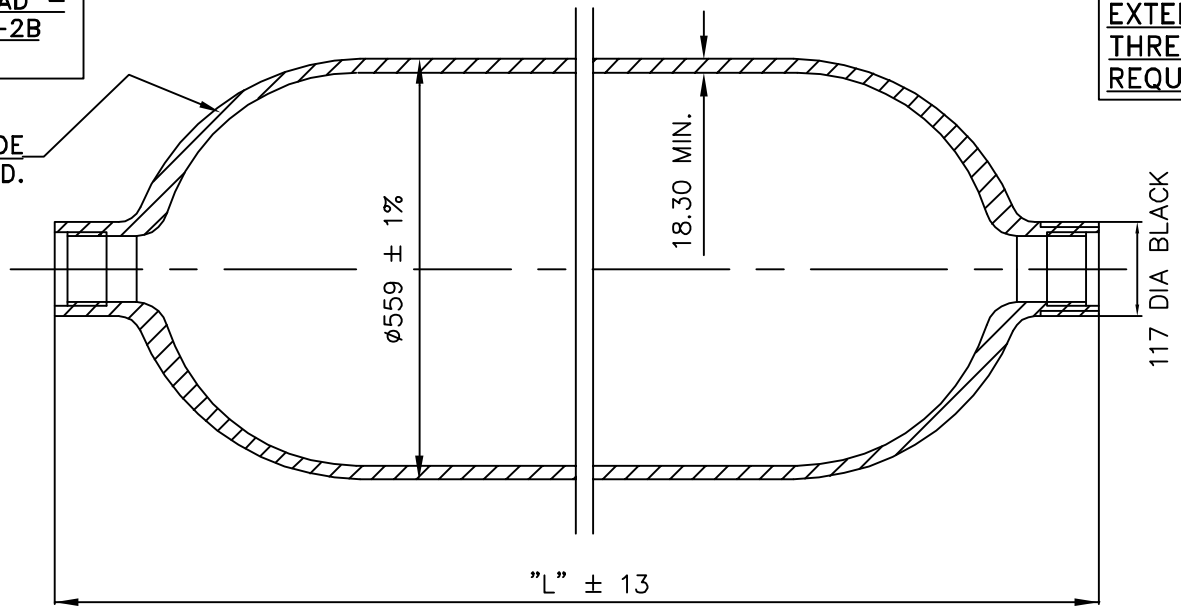

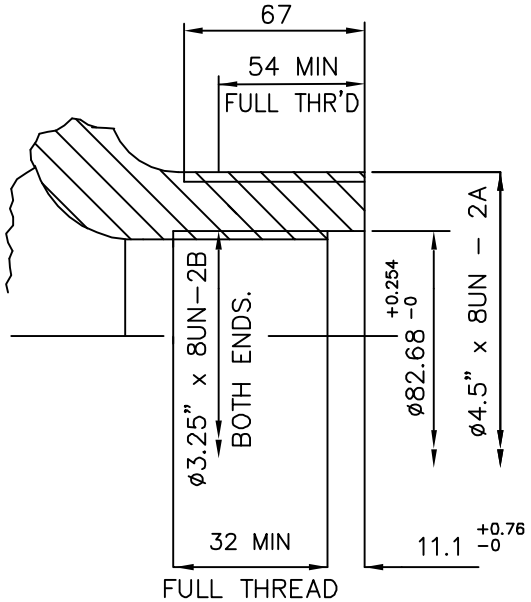

END FACE OF NECK TO BE SMOOTH & SQUARE WITH AXIS OF THREAD

DETAIL OF NECK

APPROVAL DRAWING Ref. – 38326F.

TEST PRESSURE : 450 BAR

WORKING PRESSURE : 300 BAR @ 15°C.

MATERIAL : CHROME MOLY GROUP II

UTS : 950/1100 MPa.

YIELD : 730 MPa. MIN

ELONGATION : 14% MIN ON 5.65 $\sqrt{So}$

SPECIFICATION:

BS EN ISO 11120 : 1999

CHARPY IMPACT VALUES AT –20°C
MEAN VALUES ≥ 50 J/cm²
INDIVIDUAL VALUES ≥ 40 J/cm²

ALL DIMENSIONS IN MILLIMETERS UNLESS OTHERWISE STATED

MANUFACTURED FROM HOT FINISHED TUBING.

Re/Rg = 730/950 = 0.768

REF	WATER CAPACITY LITRES +10%/–0	APPROX WATER CAPACITY LITRES	APPROX GAS (He). CAPACITY M³	LENGTH "L" mm	WEIGHT CYLINDER ONLY (KG) ±10%		RAW MATERIAL NOMINAL WALL mm.
1	2060	2165	---	10955	3135		21.4
2	2180	2290	---	11555	3310		21.4
3	1830	1920	504.8 (83.30Kgs.)	9785	2860		21.4
4	1785	1875	---	9660	2715		21.4
5	860	903	---	4785	1396		21.4

TITLE

SEAMLESS STEEL CYLINDER FOR COMPRESSED GASES EXCLUDING HYDROGEN & METHANE.

REV	DATE	CHANGE	
--	28.8.09	REF.5 ADDED.	MG.
--	27.3.09	REF.4 ADDED.	MG.
--	9.4.08	REF.3 ADDED.	KP.

CHECKED DATE

DRAWN K.Pickles DATE 7.12.07.

DRG.No. 38777C.

This drawing is confidential and it and the copyright therein are the property of CHESTERFIELD SPECIAL CYLINDERS Ltd.
Registered Office. Meadowhall Road, Sheffield, South Yorkshire. S9 1BT.
Registered in England No 4869273
© 2008 CHESTERFIELD SPECIAL CYLINDERS Ltd.